Centre Number	Candidate Number	Name

UNIVERSITY OF CAMBRIDGE INTERNATIONAL EXAMINATIONS
General Certificate of Education Advanced Level

PHYSICS **9702/04**

Paper 4

October/November 2004

1 hour

Candidates answer on the Question Paper.
No Additional Materials are required.

READ THESE INSTRUCTIONS FIRST

Write your Centre number, candidate number and name on all the work you hand in.
Write in dark blue or black pen in the spaces provided on the Question Paper.
You may use a soft pencil for any diagrams, graphs or rough working.
Do not use staples, paper clips, highlighters, glue or correction fluid.

Answer **all** questions.
The number of marks is given in brackets [ ] at the end of each question or part question.
You may lose marks if you do not show your working or if you do not use appropriate units.

If you have been given a label, look at the details. If any details are incorrect or missing, please fill in your correct details in the space given at the top of this page.

Stick your personal label here, if provided.

For Examiner's Use	
1	
2	
3	
4	
5	
6	
7	
Total	

This document consists of **14** printed pages and **2** blank pages.

© UCLES 2004

Data

speed of light in free space,	$c = 3.00 \times 10^{8}\ \text{m s}^{-1}$
permeability of free space,	$\mu_0 = 4\pi \times 10^{-7}\ \text{H m}^{-1}$
permittivity of free space,	$\epsilon_0 = 8.85 \times 10^{-12}\ \text{F m}^{-1}$
elementary charge,	$e = 1.60 \times 10^{-19}\ \text{C}$
the Planck constant,	$h = 6.63 \times 10^{-34}\ \text{J s}$
unified atomic mass constant,	$u = 1.66 \times 10^{-27}\ \text{kg}$
rest mass of electron,	$m_e = 9.11 \times 10^{-31}\ \text{kg}$
rest mass of proton,	$m_p = 1.67 \times 10^{-27}\ \text{kg}$
molar gas constant,	$R = 8.31\ \text{J K}^{-1}\ \text{mol}^{-1}$
the Avogadro constant,	$N_A = 6.02 \times 10^{23}\ \text{mol}^{-1}$
the Boltzmann constant,	$k = 1.38 \times 10^{-23}\ \text{J K}^{-1}$
gravitational constant,	$G = 6.67 \times 10^{-11}\ \text{N m}^2\ \text{kg}^{-2}$
acceleration of free fall,	$g = 9.81\ \text{m s}^{-2}$

© UCLES 2004

Formulae

uniformly accelerated motion, $s = ut + \frac{1}{2}at^2$
$v^2 = u^2 + 2as$

work done on/by a gas, $W = p\Delta V$

gravitational potential, $\phi = -\frac{Gm}{r}$

simple harmonic motion, $a = -\omega^2 x$

velocity of particle in s.h.m., $v = v_0 \cos \omega t$
$v = \pm \omega \sqrt{(x_0^2 - x^2)}$

resistors in series, $R = R_1 + R_2 + \ldots$

resistors in parallel, $1/R = 1/R_1 + 1/R_2 + \ldots$

electric potential, $V = \frac{Q}{4\pi\epsilon_0 r}$

capacitors in series, $1/C = 1/C_1 + 1/C_2 + \ldots$

capacitors in parallel, $C = C_1 + C_2 + \ldots$

energy of charged capacitor, $W = \frac{1}{2}QV$

alternating current/voltage, $x = x_0 \sin \omega t$

hydrostatic pressure, $p = \rho g h$

pressure of an ideal gas, $p = \frac{1}{3}\frac{Nm}{V}\langle c^2 \rangle$

radioactive decay, $x = x_0 \exp(-\lambda t)$

decay constant, $\lambda = \frac{0.693}{t_{\frac{1}{2}}}$

critical density of matter in the Universe, $\rho_0 = \frac{3H_0^2}{8\pi G}$

equation of continuity, $Av = \text{constant}$

Bernoulli equation (simplified), $p_1 + \frac{1}{2}\rho v_1^2 = p_2 + \frac{1}{2}\rho v_2^2$

Stokes' law, $F = Ar\eta v$

Reynolds' number, $R_e = \frac{\rho v r}{\eta}$

drag force in turbulent flow, $F = Br^2\rho v^2$

© UCLES 2004

[Turn over

Answer **all** the questions in the spaces provided.

1 A particle is following a circular path and is observed to have an angular displacement of 10.3°.

(a) Express this angle in radians (rad). Show your working and give your answer to three significant figures.

angle = ...rad [2]

(b) (i) Determine tan10.3° to three significant figures.

tan10.3° = ...

(ii) Hence calculate the percentage error that is made when the angle 10.3°, as measured in radians, is assumed to be equal to tan10.3°.

percentage error = ...
[3]

© UCLES 2004

2 An α-particle ($^{4}_{2}$He) is moving directly towards a stationary gold nucleus ($^{197}_{79}$Au).

The α-particle and the gold nucleus may be considered to be solid spheres with the charge and mass concentrated at the centre of each sphere.

When the two spheres are just touching, the separation of their centres is 9.6×10^{-15} m.

(a) The α-particle and the gold nucleus may be assumed to be an isolated system. Calculate, for the α-particle just in contact with the gold nucleus,

(i) its gravitational potential energy,

gravitational potential energy = ... J [3]

(ii) its electric potential energy.

electric potential energy = ... J [3]

(b) Using your answers in **(a)**, suggest why, when making calculations based on an α-particle scattering experiment, gravitational effects are not considered.

.....

.....[1]

(c) In the α-particle scattering experiment conducted in 1913, the maximum kinetic energy of the available α-particles was about 6 MeV. Suggest why, in this experiment, the radius of the target nucleus could not be determined.

.....

.....

.....[2]

© UCLES 2004

3 The vibrations of a mass of 150 g are simple harmonic. Fig. 3.1 shows the variation with displacement x of the kinetic energy E_k of the mass.

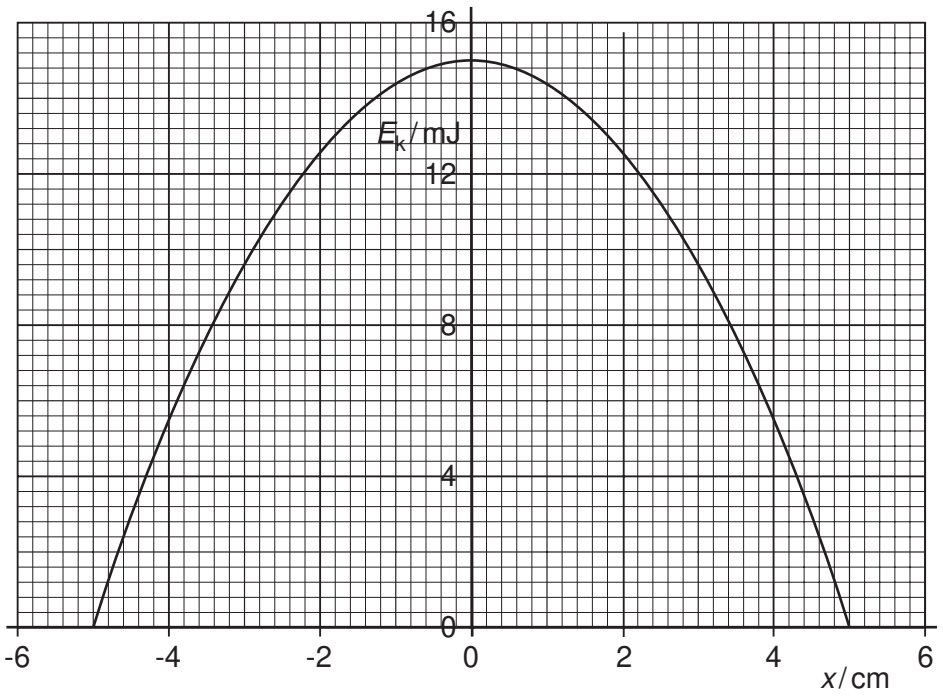

Fig. 3.1

(a) On Fig. 3.1, draw lines to represent the variation with displacement x of

(i) the potential energy of the vibrating mass (label this line P),

(ii) the total energy of the vibrations (label this line T).

[2]

(b) Calculate the angular frequency of the vibrations of the mass.

angular frequency = ... rad s^{-1} [3]

© UCLES 2004

(c) The oscillations are now subject to damping.

(i) Explain what is meant by *damping*.

.....

.....

.....[2]

(ii) The mass loses 20% of its vibrational energy. Use Fig. 3.1 to determine the new amplitude of oscillation. Explain your working.

amplitude = ... cm [2]

4 A small coil is positioned so that its axis lies along the axis of a large bar magnet, as shown in Fig. 4.1.

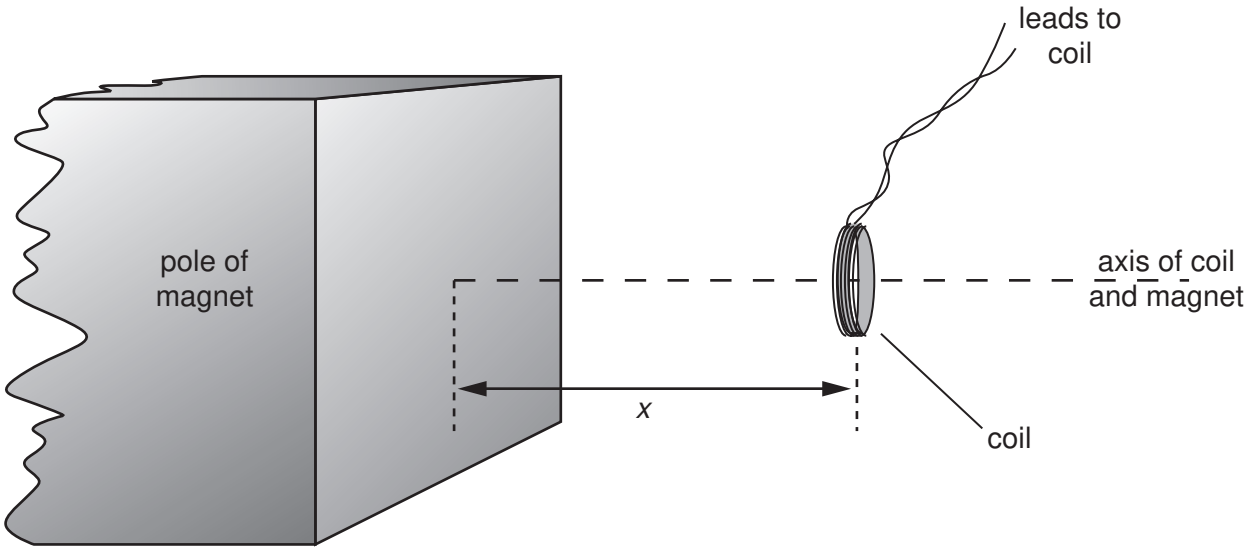

Fig. 4.1

The coil has a cross-sectional area of 0.40 cm^2 and contains 150 turns of wire.

The average magnetic flux density B through the coil varies with the distance x between the face of the magnet and the plane of the coil as shown in Fig. 4.2.

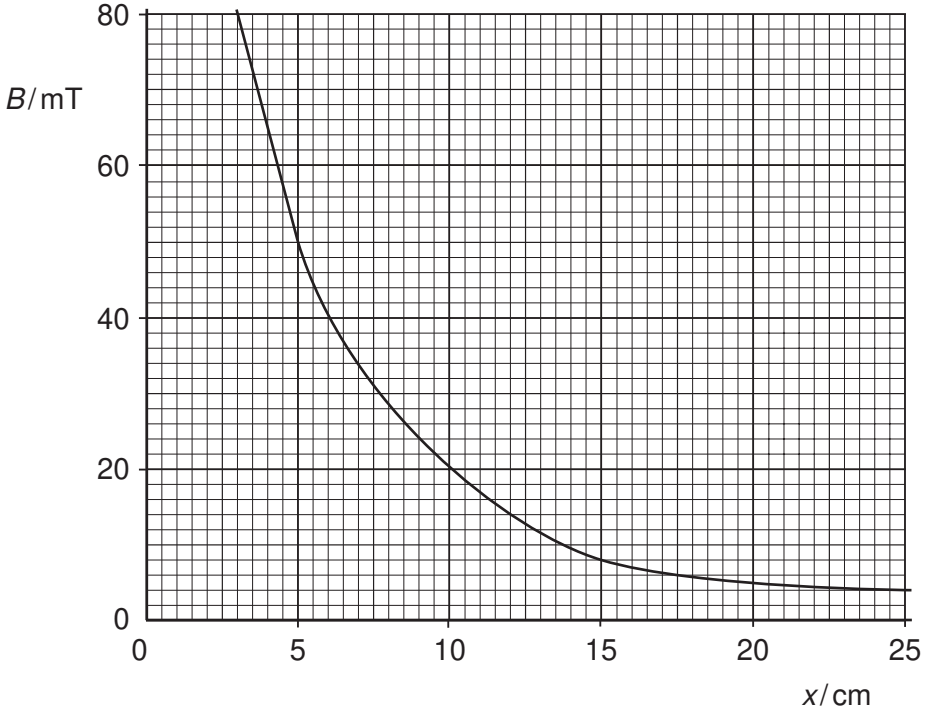

Fig. 4.2

(a) (i) The coil is 5.0 cm from the face of the magnet. Use Fig. 4.2 to determine the magnetic flux density in the coil.

magnetic flux density = ... T

© UCLES 2004

(ii) Hence show that the magnetic flux linkage of the coil is 3.0×10^{-4} Wb.

[3]

(b) State Faraday's law of electromagnetic induction.

.....

.....

.....[2]

(c) The coil is moved along the axis of the magnet so that the distance x changes from $x = 5.0$ cm to $x = 15.0$ cm in a time of 0.30 s. Calculate

(i) the change in flux linkage of the coil,

change = ... Wb [2]

(ii) the average e.m.f. induced in the coil.

e.m.f. = ... V [2]

(d) State and explain the variation, if any, of the speed of the coil so that the induced e.m.f. remains constant during the movement in **(c)**.

.....

.....

.....

.....[3]

© UCLES 2004

5 A charged particle passes through a region of uniform magnetic field of flux density 0.74 T, as shown in Fig. 5.1.

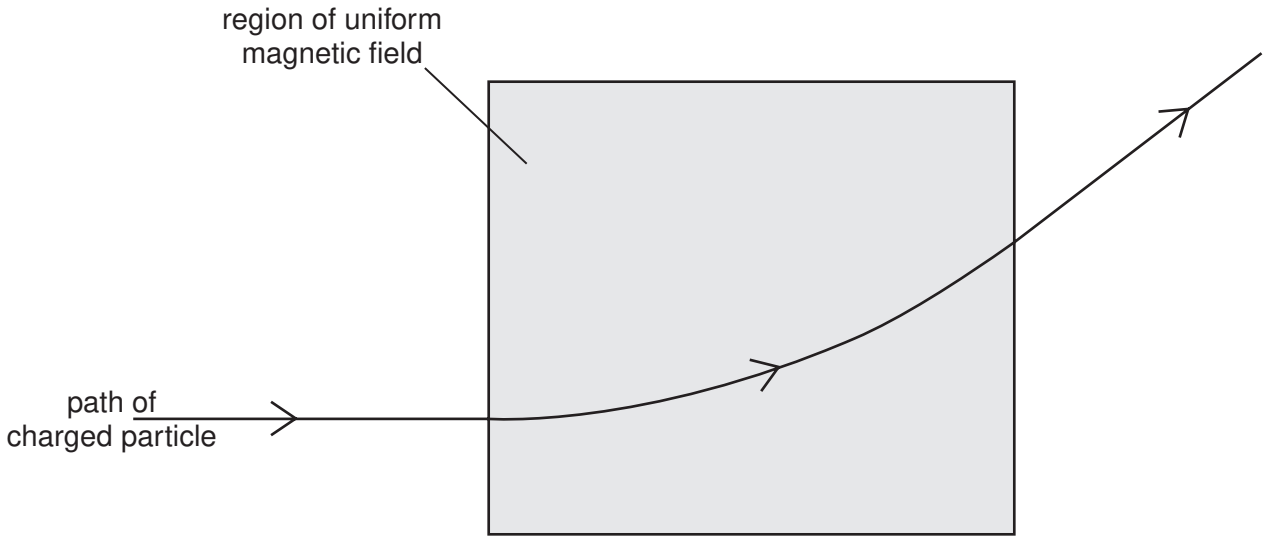

Fig. 5.1

The radius r of the path of the particle in the magnetic field is 23 cm.

(a) The particle is positively charged. State the direction of the magnetic field.

.....[1]

(b) **(i)** Show that the specific charge of the particle (the ratio $\frac{q}{m}$ of its charge to its mass) is given by the expression

$$\frac{q}{m} = \frac{v}{rB},$$

where v is the speed of the particle and B is the flux density of the field.

[2]

(ii) The speed v of the particle is $8.2 \times 10^6\,\text{m s}^{-1}$. Calculate the specific charge of the particle.

specific charge = ... C kg^{-1} [2]

(c) (i) The particle in **(b)** has charge $1.6 \times 10^{-19}\,\text{C}$. Using your answer to **(b)(ii)**, determine the mass of the particle in terms of the unified atomic mass constant u.

mass = ... u [2]

(ii) The particle is the nucleus of an atom. Suggest the composition of this nucleus.

.....

.....[1]

© UCLES 2004

[Turn over

6 The isotopes Radium-224 ($^{224}_{88}$Ra) and Radium-226 ($^{226}_{88}$Ra) both undergo spontaneous α-particle decay. The energy of the α-particles emitted from Radium-224 is 5.68 MeV and from Radium-226, 4.78 MeV.

(a) (i) State what is meant by the *decay constant* of a radioactive nucleus.

.....

.....

.....[2]

(ii) Suggest, with a reason, which of the two isotopes has the larger decay constant.

.....

.....

.....

.....[3]

(b) Radium-224 has a half-life of 3.6 days.

(i) Calculate the decay constant of Radium-224, stating the unit in which it is measured.

decay constant = ...[2]

(ii) Determine the activity of a sample of Radium-224 of mass 2.24 mg .

activity = ... Bq [4]

© UCLES 2004

(c) Calculate the number of half-lives that must elapse before the activity of a sample of a radioactive isotope is reduced to one tenth of its initial value.

number of half-lives = ...[2]

© UCLES 2004

[Turn over

7 The e.m.f. generated in a thermocouple thermometer may be used for the measurement of temperature.

Fig. 7.1 shows the variation with temperature T of the e.m.f. E.

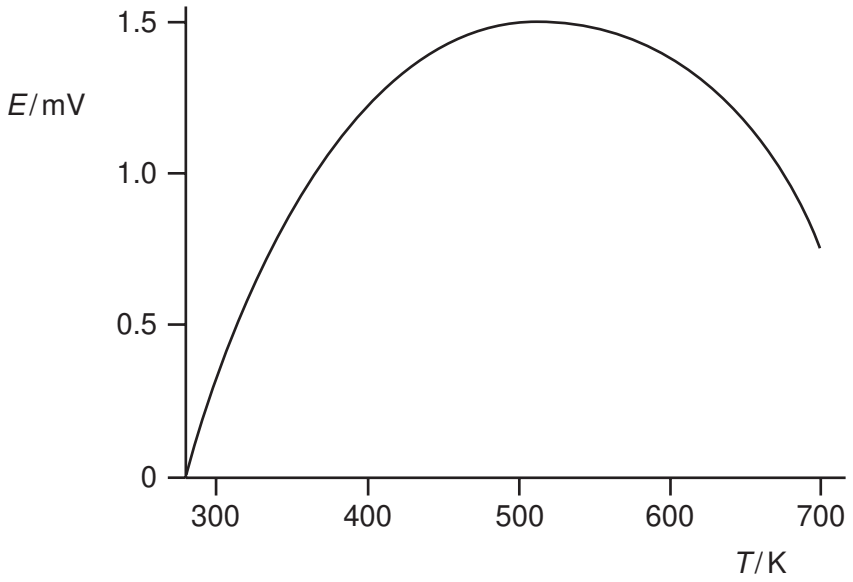

Fig. 7.1

(a) By reference to Fig. 7.1, state two disadvantages of using this thermocouple when the e.m.f. is about 1.0 mV.

1. .....

2. .....[2]

(b) An alternative to the thermocouple thermometer is the resistance thermometer.

State two advantages that a thermocouple thermometer has over a resistance thermometer.

1. .....

.....

2. .....

.....[2]

© UCLES 2004

BLANK PAGE

BLANK PAGE

Every reasonable effort has been made to trace all copyright holders where the publishers (i.e. UCLES) are aware that third-party material has been reproduced. The publishers would be pleased to hear from anyone whose rights they have unwittingly infringed.

University of Cambridge International Examinations is part of the University of Cambridge Local Examinations Syndicate (UCLES), which is itself a department of the University of Cambridge.